Monnit WIT™

Wireless Dry Contact Sensor

Technical Overview

General Description

The Wireless Dry Contact Sensor can be used to detect contact between two wired contact points, an external mechanical switch or a contact plate.

Features

- 3 ft. leaded wires.
- Can integrate with switches.
- Free iMonnit online wireless sensor monitoring and notification system to configure sensors, view data and set alerts via SMS text and email.

Principle of Operation

The Monnit Wireless Dry Contact Sensor detects when their is contact between the two wired end points. It can easily be integrated into existing switches or contact plates. When the sensor detects contact between the two end points, it will immediately turn on the RF radio and transmit the data to the wireless gateway and iMonnit Online Sensor Monitoring and Notification System, allowing the user to immediately receive an SMS text or email alert. The sensor can be configured to detect both closed and open loops alerting if contact is made or broken.

Power Options

Sensors are powered by a replaceable 3.0 V lithium coin cell battery. Optional AA battery powered sensors are available. The AA version of these sensors are larger in size (3” [L] x 2.1” [W] x 1.2” [H]) and include two AA long-life lithium ion batteries.

It is recommended that unless you are using the AA battery solution, you set heartbeat to no faster than one hour to preserve battery life.

Monnit WIT Sensor Core Specifications

- Power: Replaceable 3.0 V lithium coin cell battery
- Communication: RF 900 MHz
- Dimensions: 1.775” x 1.040” x 0.785”
- Antenna: 4” wire antenna
- Operating Temperature: -40° to 85°C (-40° to 185°F)
- Device Range: 250 - 300 ft. non-line-of-sight*
- Battery Life: At 1 hour heartbeat setting, coin cell battery will last ~ 1-2 years.**

* Actual range may vary depending on environment.
** Battery life is determined by sensor reporting frequency and other variables.

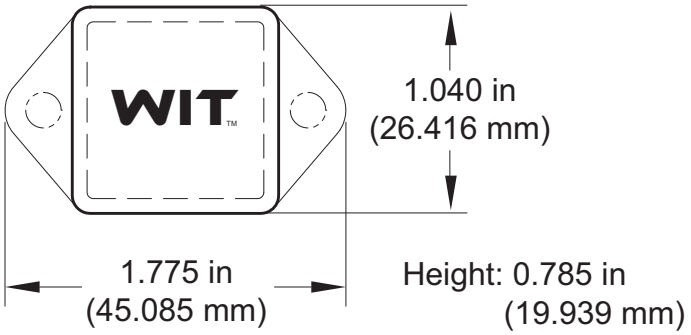

Maximum Ratings	
Temperature Range	- 40°C to +85°C (-40°F to +185°F)
Storage Humidity Range	<75% RH

Example Applications

- Barn door monitoring.
- Freezer / cooler door monitoring.
- Forklift seat switches.
- Button or switch integration.
- Production line tracking.

The Leader in Low Cost Wireless Sensors

Technical Specifications	
Supply Voltage	2.0 - 3.6 VDC *
Current Consumption	0.7 µA (sleep mode) 2 mA (radio idle/off mode) 2 mA (measurement mode) 25 mA (radio RX mode) 35 mA (radio TX mode)
Operating Temperature Range	-40°C to +85°C (-40°F to +185°F) **
Optimal Battery Temperature Range (Coin Cell)	+10°C to +60°C (+50°F to +140°F)
Lead Wire Length	3 ft. (36 in.)
Detection Wires	High Impedance

* Hardware can not withstand negative voltage. Please take care when connecting a power device.
** At temperatures above 100°C, it is possible to lose programmed memory.

Caution/Notice:

This product is designed for application in an ordinary environment (normal room temperature, humidity and atmospheric pressure). Do not use this sensor under the following conditions as these factors can deteriorate the product characteristics and cause failures and burn-out.

- Corrosive gas or deoxidizing gas - chlorine gas, hydrogen sulfide gas, ammonia gas, sulfuric acid gas, nitric oxides gas, etc.).
- Volatile or flammable gas.
- Dusty conditions.
- Under low or high pressure.
- Wet or excessively humid locations.
- Places with salt water, oils chemical liquids or organic solvents.
- Where their are excessively strong vibrations.
- Other places where similar hazardous conditions exist.

Use this product within the specified temperature range. Higher temperature may cause deterioration of the characteristics or the material quality of this product.

For more information about our products or to place an order, please contact our sales department at 801-561-5555.

Visit us on the web at www.monnit.com.

Monnit Corporation
7304 South Cottonwood
Suite #204
Midvale, Utah 84047
801-561-5555
www.monnit.com

Monnit, Monnit Logo, Monnit WIT and iMonnit are trademarks of Monnit, Corp.
©2011 Monnit Corp. All Rights Reserved.